AL ritma

High performance label applicator

MARK-LINE SYSTEMS
[MARKEERIMISLAHENDUSED]

Mark-Line Systems OÜ
Sära tee 11-3, Peetri, 75312, Rae vald
Tel. +372 5152123
info@markline.ee
www.markline.ee

ALritma

Introduced in the year 2000, the ALritma labeling head series has been immediately appreciated for its reliability and user friendly features. Due to ongoing technical development and a base of more than 20.000 units installed in the market, the latest version of the ALritma series includes cutting edge technology and represents the precise choice for packaging lines where production speed and label application accuracy are primary needs.

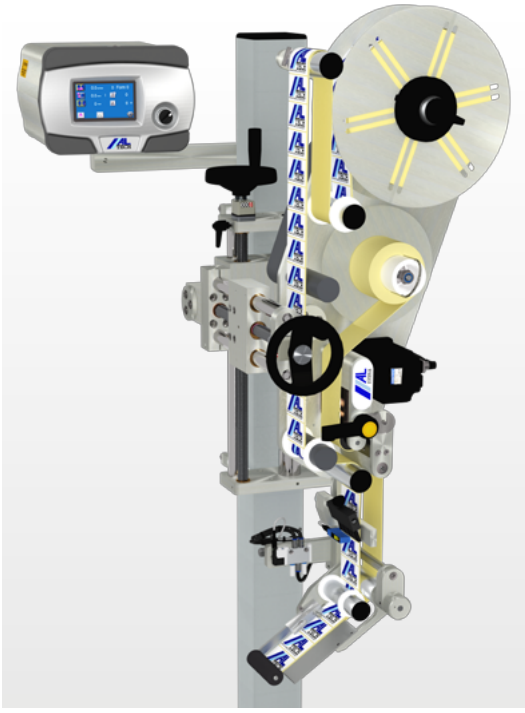

ALritma in vertical configuration. (Video)

ALritma labeling units are based on an innovative mechanical structure which matches great sturdiness with versatility. The maximum label width varies according to the model and can be 100, 200 or 300 millimeters; all models have side access for web threading; a reel holder which has a diameter of 300 mm with an expanding locking spindle; the drive group has been designed to exploit the stepper motor features, guaranteeing accurate label positioning at speeds up to 50 m/min.

The body of the label applicator is remote from the electronic controls. Those are located in a separated control box with a compact and hygienic design. The unit can be placed and oriented in different ways, to provide comfortable access to the operator in any installation configuration. Thanks to the latest generation of "cool" electronic components that do not require the use of fans, the head can be powered with 110-240 V (auto-switching), and offers IP55 protection for both the head's body and the control box.

ALritma T with printer unit. (Video)

The applicator is controlled by a powerful microprocessor, with a 4.3" color touch screen panel which can manage advanced functions. This relieves the operator of complicated mechanical adjustments saving a considerable amount of time during format changeovers. In more detail, the following functions are available:

- Adjustment of label dispensing speed.
- Label pre-dispensing adjustment.
- Labeling delay adjustment in mm, with shift register.
- Storing of 40 different labeling recipes.
- Automatic recovery of missing labels.
- Progressive and regressive counter.
- Filter for double product detection.
- End-of-roll alarm and web break alarm.
- Output connection to other systems.

In addition to its sophisticated standard features, ALritma can be equipped with an array of optional devices:

- Printer/coders for variable data.
- Label sensor for transparent material labels (ultrasonic).
- Pneumatic and air-blow applicators.
- Near end of reel control, with multicolor alarm beacon.
- Non-stop control system, to control two sequentially placed applicators.
- Encoder for automatic speed matching, with algorithm to maintain label placement position at different speeds.
- Multipage labels kit.
- Semi-automatic kit.
- Ultra compact configuration (with smaller unwind unit).

Touchscreen control box.

ALritma X

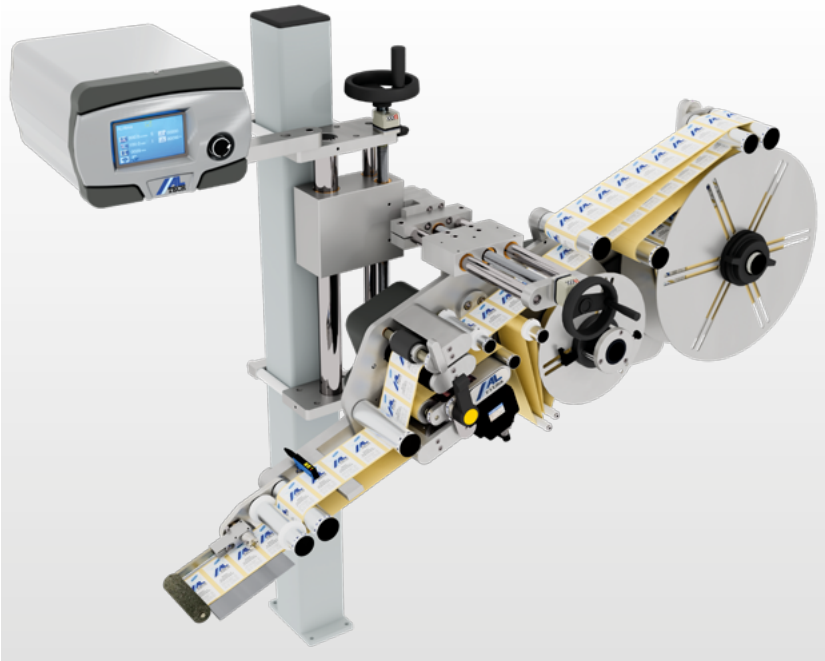

ALritma X with High-Performance kit. (Video)

ALritma X represents the maximum evolution of the ALritma series, where the X distinguishes its extraordinary performance for high volume, high speed requirements.

The entry version of the new ALritma X is equipped with a larger, 400 mm diameter unwind unit and an oversized rewind unit for the liner, to extend the working time between label changeovers. It can reach label application speeds of up to 40 m/min and is available for label widths of 100 and 200 mm.

ALritma X can be fitted with an HP (High Performance) kit which includes a motorized rewinder unit for the liner and an innovative “push-pull” label web drive system. With this configuration the unit can reach 90 m/min and a cruising rate of 900 labels/min. (depending on label size), with high positioning accuracy even during speed variations.

This version is particularly suited to huge workloads, such as on rotary labelers or non-stop applications. The ALritma X includes numerous technological innovations, the result of ALTECH’s experience in labeling machine manufacturing. Among these:

- The facilitated paper insertion system.
- The double effect pre unwinding system.
- The push-pull drive system.
- The compact rewind unit with brushless motor and reducer integrated in the rewinding disk.
- The silicone paper removal system integrated into the web guiding disc.

Technical specifications

ALritma

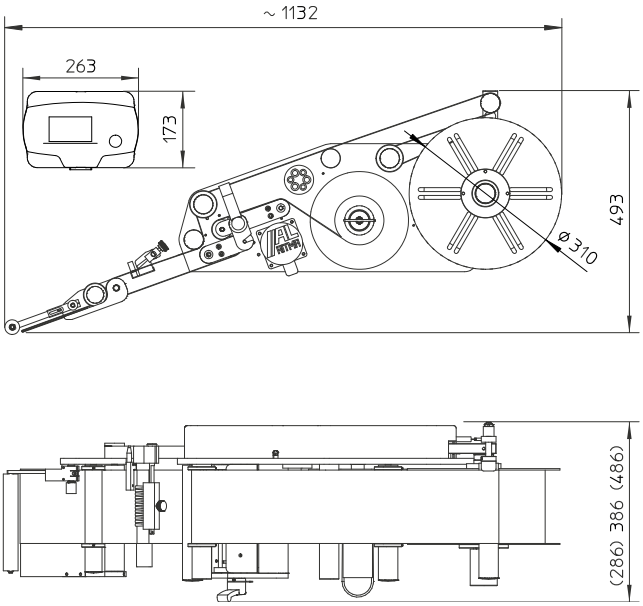

ALritma X

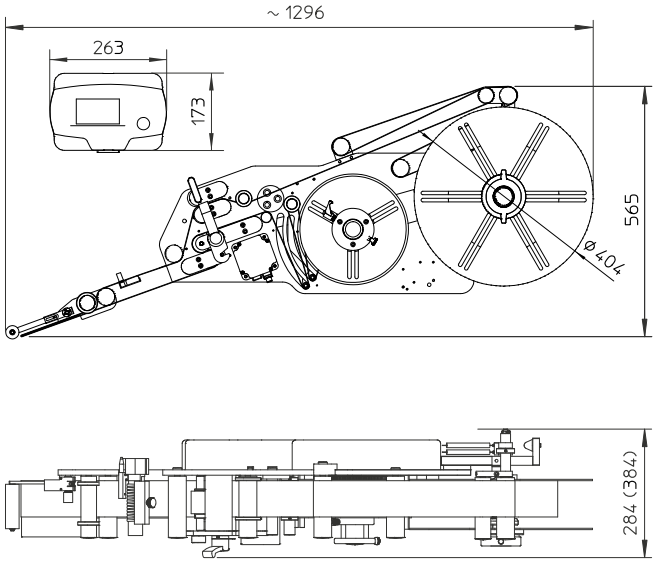

	ALritma S	ALritma M	ALritma L	ALritma XS	ALritma XM
LABELS WIDTH (min/max)	20/107 mm	55/202 mm	55/302 mm	20/107 mm	55/202 mm
DISPENSING SPEED	50 m/min.	50 m/min.	40 m/min.	40 m/min. opt. 90 with HP kit RX12	40 m/min. opt. 70 with HP kit RX22
COMMANDS	40 selectable label recipes with color touch screen display, 4,3”				
PROTECTION	IP55				
UNWINDER UNIT	Ø 300 mm	Ø 300 mm	Ø 300 mm	Ø 400 mm	Ø 400 mm
OPTIONS					
ENCODER	✓ (CS01)	✓ (CS01)	✓ (CS01)	✓ (CS01)	✓ (CS01)
NEAR END OF ROLL CONTROL (with 3 colors light column)	✓ (CS02)	✓ (CS02)	✓ (CS02)	✓ (CS02)	✓ (CS02)
FULL REWINDER CONTROL	✓ (CS12)	✓ (CS12)	✓ (CS12)	✓ (CS12)	✓ (CS12)
TRANSPARENT LABEL SENSOR	✓ (CE06)	✓ (CE06)	✓ (CE06)	✓ (CE06)	✓ (CE06)
PNEUMATIC APPLICATORS	✓ (ACXX)	✓ (ACXX)	✓ (ACXX)	-	-
MARKERS/PRINTERS	✓ (SCXX/STXX)	✓ (SCXX/STXX)	✓ (SCXX/STXX)	✓ (SCXX/STXX)	✓ (SCXX/STXX)
MULTIPAGE LABELS KIT	✓ (PR01)	✓ (PR01)	✓ (PR01)	-	-
NON-STOP CONTROL SYSTEM FOR TWO LABEL APPLICATORS	✓ (CS07)	✓ (CS07)	✓ (CS07)	✓ (CS07)	✓ (CS07)
SEMI-AUTOMATIC CONFIGURATION	✓ For cylindrical products (LR08) For flat products (LR03)			-	-
ULTRA COMPACT CONFIGURATION	✓ (LR45) With smaller unwind unit			-	-
POWER SUPPLY	110 - 230 V, 50 - 60Hz., 300 W				

ALTECH SRL
Viale de Gasperi, 70 - 20010 Bareggio (MI), Italy
www.altech.it - E-mail: Info@altech.it
Tel. +39.02.90.363.464 - Fax +39.02.90.363.481