Self-adhesive label applicator

Mark-Line Systems OÜ
Sära tee 11-3, Peetri, 75312, Rae vald
Tel. +372 5152123
info@markline.ee
www.markline.ee

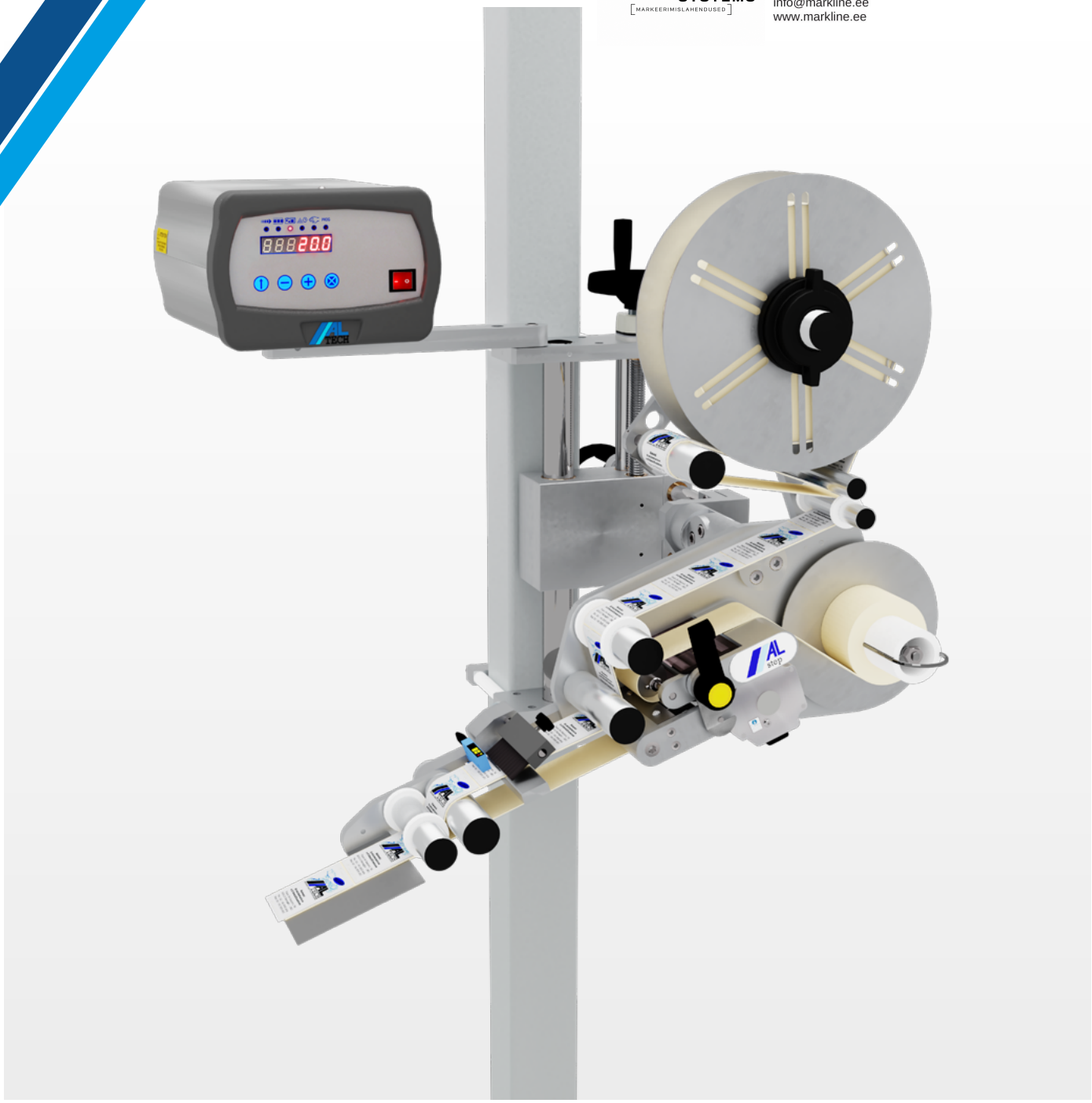

ALstep: a simple, versatile and low-cost label applicator

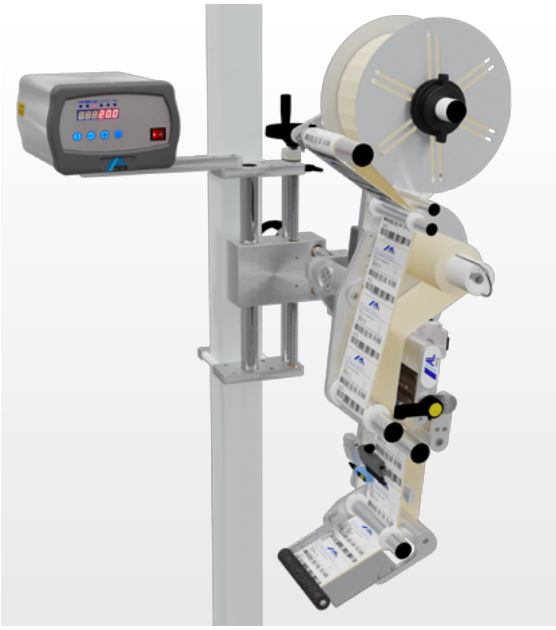

The ALstep industrial labeling heads are particularly compact and economical. Thanks to its modular design, the machine body can be arranged in different configurations to suit any packaging line. The side-access paper reel and web path allows for easy label changes.

The control electronics are separated from the machine body and housed in a separate box, featuring a compact, hygienic design. It can be orientated in different ways to always ensure an ergonomic access. The fan less control box and next generation components deliver unprecedented levels of reliability and allow for 110 and 230 V power supply.

ALstep in vertical configuration. (Video)

ALstep E

The ALstep E is the entry-level model of the ALstep series: the letter E (Economical) refers to its low cost and compactness. The special design of the machine body - fitted with a 230-mm diameter roll unwind - and the 100 mm paper width make it the smallest labelling head on the market. This model is particularly suitable for promotional labelling, including packaging lines with limited availability of space.

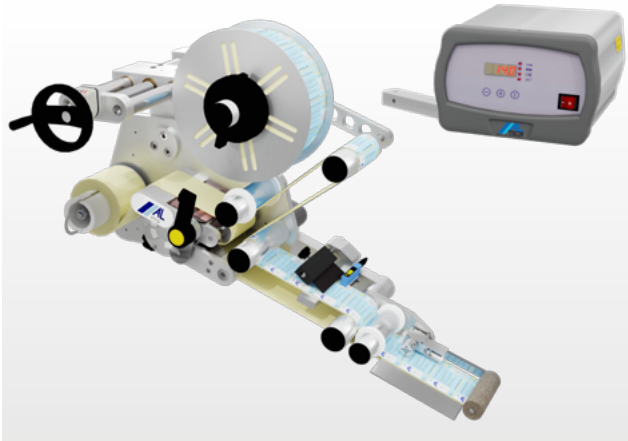

ALstep E.

It is equipped with a microprocessor-controlled stepper motor which achieves a dispensing speed of 18 m/min. The labeling parameters (speed, pre-dispensing and label delay) can be set through the display with three function keys, positioned on the control box.
The automatic recovery of missing labels on the web is standard on all ALsteps.

ALstep

The ALstep is one of the best-selling labeling heads on the market, due to its incomparable price/performance ratio.
It comes in two versions, S or M, which differ with regard to the label maximum width, 100 mm and 200 mm respectively.
Thanks to a powerful microprocessor-controlled stepper motor, it can reach a speed of 30 m/min (20 m/min in the M version) and can hold label reels up to 300 mm diameter for longer run times.

It is fitted with a display featuring 4 function keys positioned on the control box, through which labelling parameters - including advanced functions - can be entered.

ALstep with printer. (Video)

The following functions are available as standard:

- Adjustment of label dispensing in m/min;
- Pre-dispensing adjustment in mm;
- Labeling delay adjustment in mm;
- Automatic recovery for missing labels;
- Progressive counter;
- End-of-roll alarm and web break alarm with warning on display;
- Output connection to other systems.

ALstep control box.

It can also be equipped with an array of ancillary devices, including:

- Printers for variable data;
- Label sensor for transparent material;
- Pneumatic air-blow applicators;
- Checking device for near end of label reel, with multi-colours alarm beacon;
- Multi-page label kit;
- Speed matching via encoder;
- Kit for ultra-compact configuration (with reduced unwinder unit).

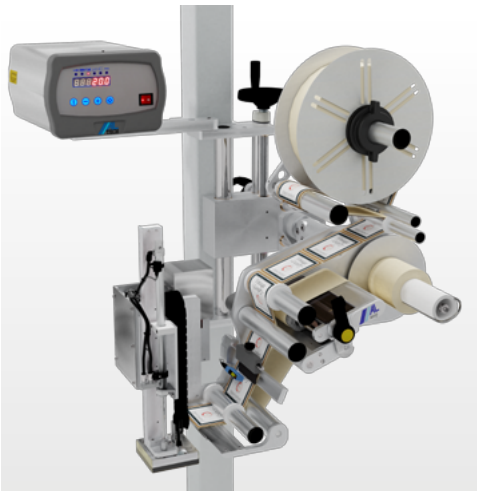

ALstep with pneumatic applicator. (Video)

ALmatic

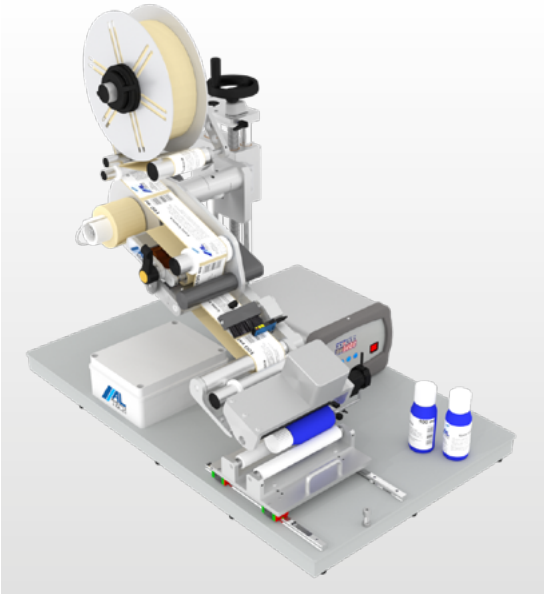

ALmatic C for cylindrical products labeling. (Video)

The ALmatic is a configuration of the ALTECH heads which is designed for the semi-automatic application of labels on products that are manually positioned by the operator.
It includes a labeling head, a product positioning system and a support table.
The ALmatic comes in two versions - C for cylindrical products and E forflat-sided or slightly elliptical products.

The C version is remarkably simple to operate by merely positioning the product lying flat on a mounting template over a cart running on ball bearing slides. By pushing the template forward, the machine rotates the product and applies the label around it. The special design of the rotation system allows for accurate application even on small or shaped products, such as syringes.

By virtue of their ease of use, the ALstep labeling heads - including the low-cost ALstep E - are suitable to be used with the ALmatic C. Instead, the ALmatic E version for the labeling of flat-sided or slightly elliptical products can be only equipped with the ALritma heads. The system operates in a similar way, i.e. the product must be manually positioned on a fixture mounted on a cart running on ball bearing slides. In this case, however, the application takes place while the product passes over: the synchronization through encoder allows the labelling head to “read” the cart movement and dispense the label with millimetre accuracy. The labeling heads used in the ALmatic systems are the same models as the ALstep and ALritma ranges of industrial heads.
If necessary, they can subsequently be converted or installed on completely automatic systems.

Technical specifications

ALstep E

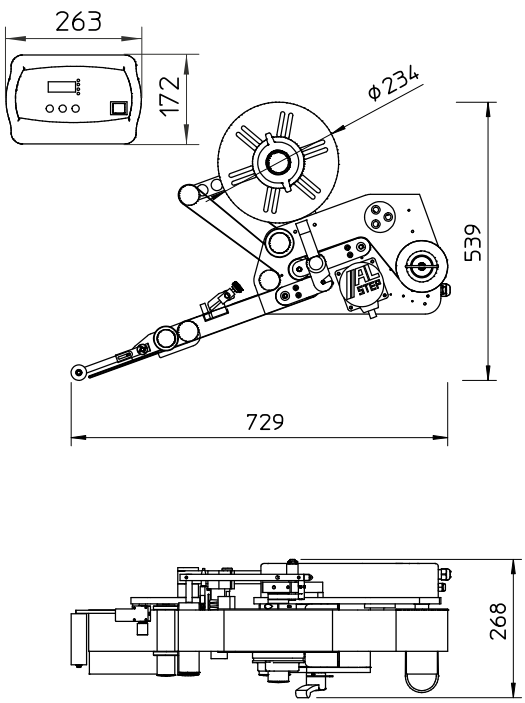

ALstep

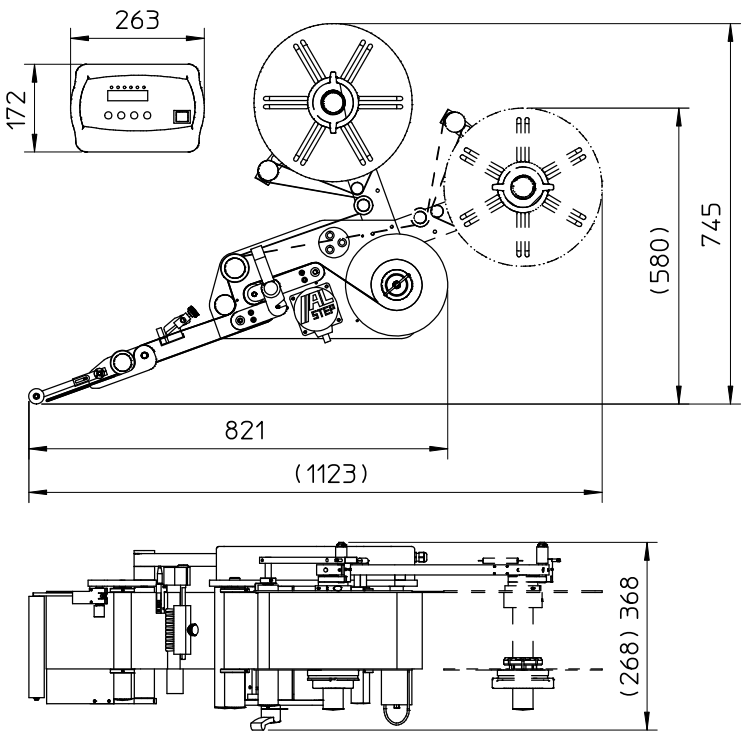

	ALstep E	ALstep S	ALstep M
WEB/LABEL WIDTH (min/max)	20/107 mm	20/107 mm	55/202 mm
SPEED	18 m/min.	30 m/min.	20 m/min.
CONTROLS	Display and 3 function keys	Display and 4 function keys	
UNWINDER UNIT	Ø 230 mm	Ø 300 mm	
OPTIONS			
ENCODER	-	✓ (CS01)	✓ (CS01)
NEAR END OF ROLL SENSOR (with 3 colour beacon)	-	✓ (CS02)	✓ (CS02)
TRANSPARENT LABEL SENSOR	✓ (CE06)	✓ (CE06)	✓ (CE06)
PNEUMATIC APPLICATORS	-	✓ (ACXX)	✓ (ACXX)
MARKERS/PRINTERS	-	✓ (SCXX/STXX)	✓ (SCXX/STXX)
MULTIPAGE LABELS KIT	-	✓ (PR01)	✓ (PR01)
CONFIGURATION FOR SEMI-AUTOMATIC APPLICATIONS	✓ For cylindrical products (LR08)		
ULTRA COMPACT CONFIGURATION	✓	✓ (LS45) With reduced unwinder unit	
POWER SUPPLY	110 - 230 V, 50 - 60Hz., 300 W		

ALTECH SRL
Viale de Gasperi, 70 - 20010 Bareggio (MI), Italy
www.altech.it - E-mail: Info@altech.it
Tel. +39.02.90.363.464 - Fax +39.02.90.363.481